WEBINAR

JULY 26, 2021

Bill Whitlock
AES Life Fellow

Analog System Interconnection Standards

AUDIO AES® Standards

Audio Engineering Society

aesshow.com

BILL WHITLOCK

Bill Whitlock joined the AES in 1966 and has been active in standards work since 1994. He was one of several chairs of working group SC-05-05 that wrote AES48, he created a revised CMRR test for IEC standard 60268-3 that was adopted in 2000, and is a member of UL's Technical Advisory Committee for pro audio. Bill's landmark paper on balanced interfaces, as well as the late Neil Muncy's paper on the "pin 1 problem," were published in the best-selling June 1995 special edition of the AES Journal. He's become an industry guru on AC power, grounding, and signal interfacing through his writing and teaching at conventions and universities, including an invited lecture at MIT in 2007. He's a subject matter expert for CEDIA University and his NSCA students voted him *Technical Instructor of the Year* in 2009 and 2010. He's written numerous magazine columns and articles, several chapters for Glen Ballou's *Handbook for Sound Engineers*, and dozens of application notes for Jensen Transformers.

Bill's pro-audio career started with premier custom console-maker Quad-Eight in 1972, where he conceived and developed Compumix® console automation. In 1981 he joined Capitol Records as manager of electronic development engineering. In 1989, after Deane Jensen's tragic death, he became owner and chief engineer of Jensen Transformers and began his research into signal interfaces and system grounding. He sold Jensen in 2014, but continues to do free-lance circuit and product design. His five patents include the InGenius® balanced line receiver by THAT Corporation and the ExactPower® waveform-correcting AC voltage regulator. He became a Life Fellow of the AES in 2012 and is Life Senior Member of the IEEE. He currently resides in Ventura, CA.

INTRODUCTION

- A project to standardize all specifications published by equipment manufacturers has been talked about within AES Standards for at least 20 years. But such a project is necessarily nebulous and knowing when to stop is a problem, not to mention push-back from equipment makers, who often feel that publishing minimal or no product specs gives them a marketing advantage.
- Before about 1970, pro audio equipment most often used transformers to interface their inputs and outputs, making interconnections straightforward and relatively trouble-free. But equipment design has evolved and now there are a number of electronic interfaces in wide use. A few combinations are well-known to degrade performance or even damage equipment. But, to predict or avoid these problems, we need to know **"What's behind the connector?"**
- Since specs for inputs and outputs is a smaller and more defined project, a number of standards members finally decided it was time to start formulating a standard.
- The current writing group includes: R. Cabot, B. Whitlock, R. L. Hess, J. Woodgate, J. Brown, A. P. Kuzub , A. Walker, and J. Meyer. Anyone interested is encouraged join and participate in the on-line and in-person meetings.

IT'S ABOUT INTEROPERABILITY

- **X-152 will create a STANDARD for *presenting* electrical specifications for *analog audio* system component inputs and outputs in a way that enables *interoperability* issues to be predicted.**
- **The problem:** Signals normally move from the output of one system component to the input of the next via cables with connectors. But mechanically compatible connectors do not guarantee electrical compatibility of the electrical interfaces at component inputs and outputs. Depending on the manufacturer's design decisions, behavior of the interfaces can be unexpected.
- **The solution:** The proposed format for presenting input and output specifications in a component datasheet will allow prospective buyers and users to predict, and potentially avoid, interoperability issues.
- **Applicability:** The standard applies to balanced analog audio interconnections and to transitional (balanced to unbalanced or unbalanced to balanced) connections to them. Fully unbalanced interconnections (i.e., computers) and those with source impedances over 1kΩ (i.e., some musical instruments) are purposely excluded.

INTERFACES AND MYTHS

- Do cables really “pick up” noise from the air like a radio?
- Equipment manufacturers often don’t know ground loops from **FROOT LOOPS** **...** and it’s often what’s NOT on their spec sheet that complicates noise and other problems!
- Basic rules of physics are routinely overlooked, ignored, or forgotten
- Overheard at a cocktail party:

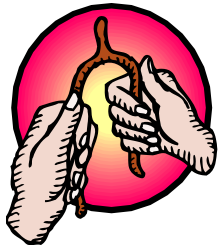

“What do you do for a living?”

“I design and install sound systems.”

“What's so hard about that ... you just plug the stuff together, right?”

PHYSICS POLICE RULE!

Courtesy of Coilcraft

“GROUND LOOP” LINKS AGGRESSOR TO VICTIM

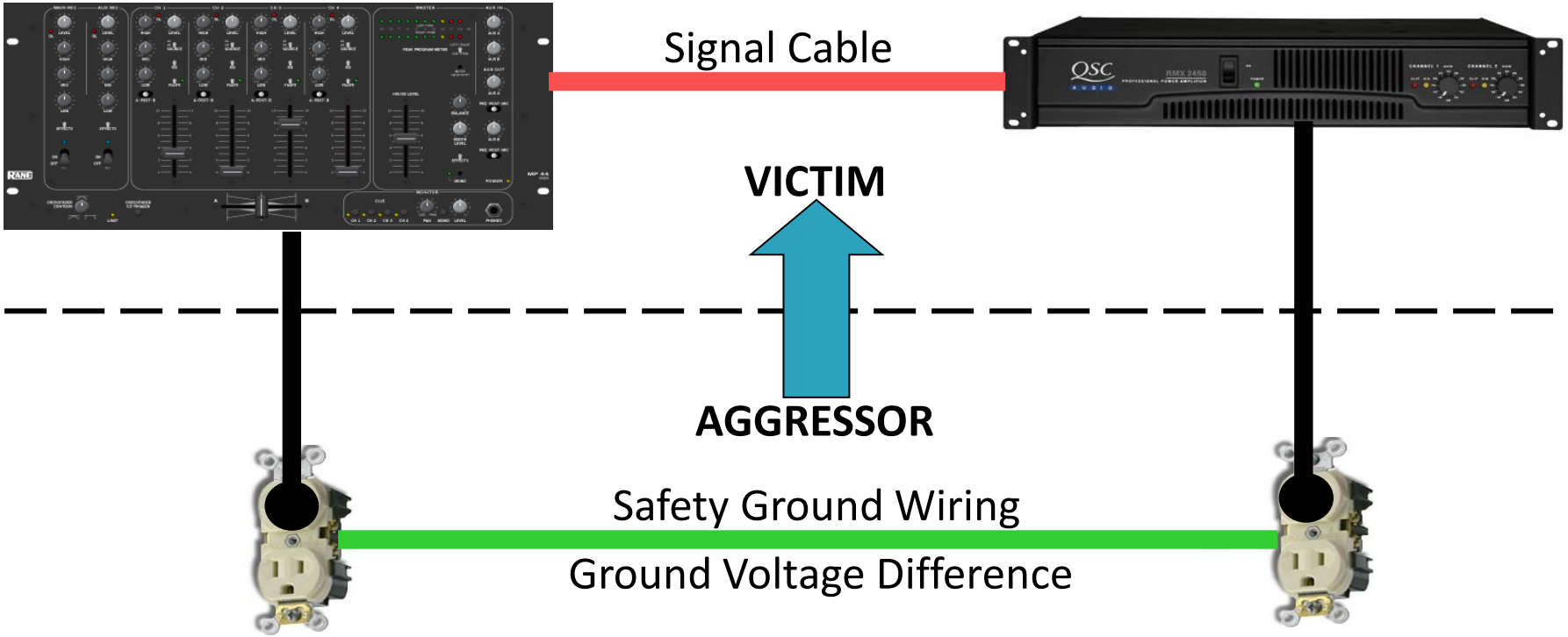

AC POWER AND GROUNDING – *THE "AGRESSOR"*

- AC power is the electrical framework on which electronic systems are overlaid
- The National Electrical Code, a.k.a. "Code," defines wiring rules and practices designed to prevent fire and loss of life.
  - Enforced nation-wide by the "authority having jurisdiction" or "AHJ"
  - NOT designed to reduce noise problems in electronic systems!
  - Code is NOT optional – violators can be, and often are, prosecuted!
- To deal with system noise issues, we must understand how a Code-compliant system works – and what the unintended "side effects" are

FARADAY'S LAW OF MAGNETIC INDUCTION

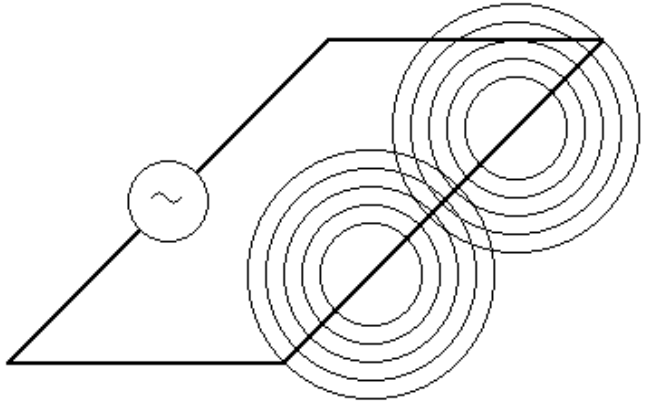

Fluctuating field surrounds every wire carrying AC **CURRENT**

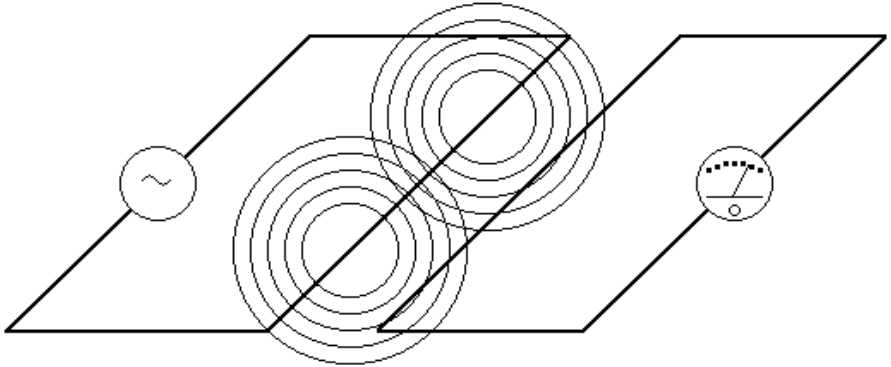

Field induces an AC **VOLTAGE** in any nearby conductor (transformer principle)

MAGNETIC FIELDS IN ROMEX®

Current in L and N are equal but flow in opposite directions

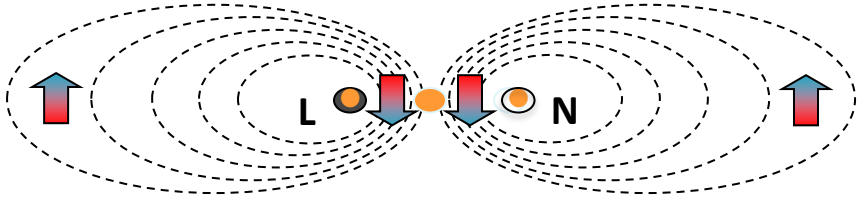

Safety Ground Wire "Sees" Zero Magnetic Field at Exact Midpoint

(cross-section view)

Instantaneous L and N currents are flowing into page and out of page

THE “CONDUIT TRANSFORMER”

Formed by proximity of randomly-positioned wires inside electrical conduit!

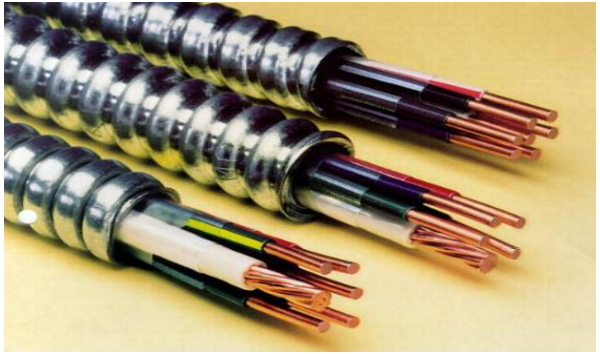

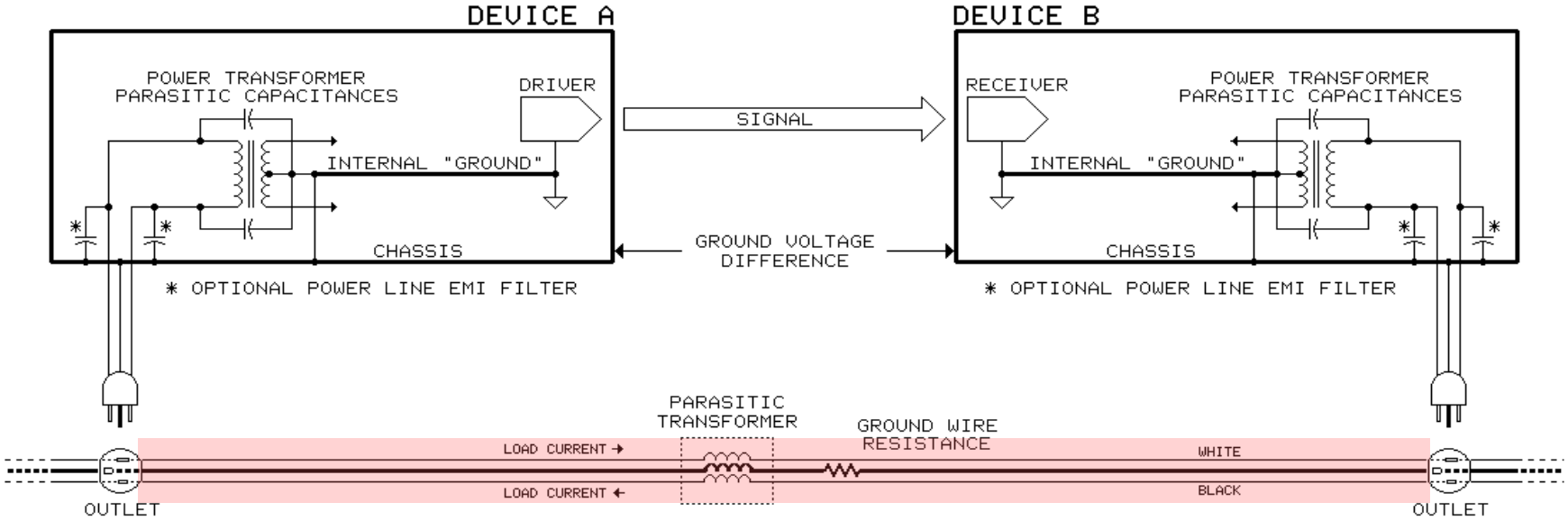

THE "CONDUIT TRANSFORMER"

- **This effect creates the driving force for 99% of ground loops!**
- Load current in line and neutral produces opposing magnetic fields since instantaneous current flow is in opposite directions
- Imperfect cancellation **magnetically induces** voltage over the length of the nearby safety ground conductor
  - Strongly affected by geometry and proximity of wires
  - Highest voltages with randomly positioned wires in conduit
  - Lower voltages with uniform geometry of Romex®
- Voltage is directly proportional to **load current**, **wire length**, and **rate of change in current** or $\Delta I/\Delta t$
  - Mechanism favors high-frequency harmonics of 60 Hz or "buzz" sound
  - For constant current in L and N, induced voltage rises at 6 dB/octave

TEST RESULTS

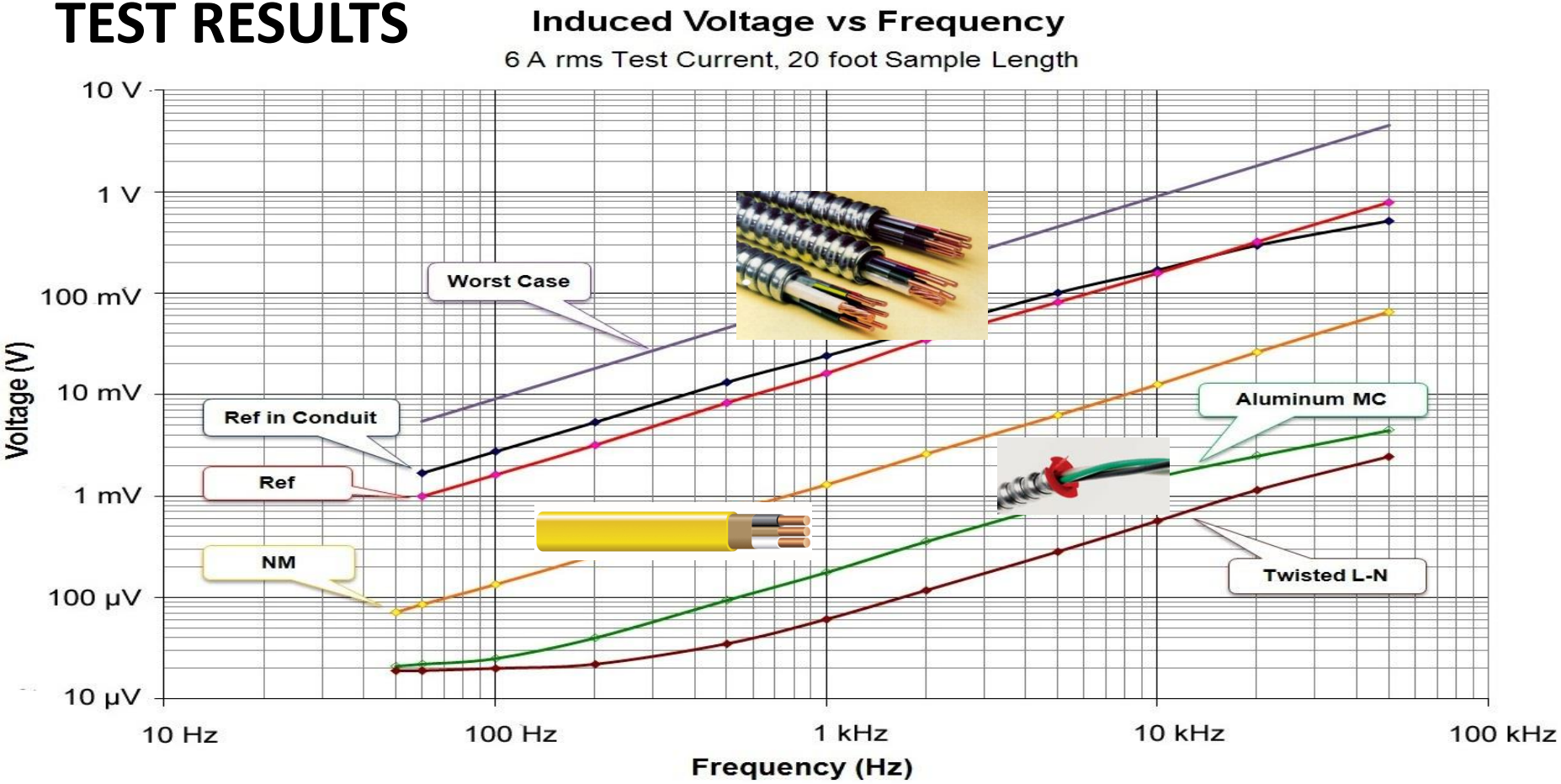

THE FACTS OF LIFE

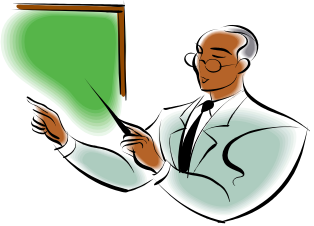

- SMALL VOLTAGE DIFFERENCES WILL **ALWAYS** EXIST BETWEEN ANY TWO PIECES OF *GROUNDED* EQUIPMENT

- SMALL LEAKAGE CURRENTS WILL **ALWAYS** FLOW IN SIGNAL CABLES OF *UN-GROUNDED* EQUIPMENT

SIGNAL INTERFACES – *THE "VICTIM"*

- An **interface** consists of a device output (line **driver**), the interconnecting cable (**line**), and a device input (line **receiver**)
- **TWO** conductors are always required to complete a signal circuit
- **Balanced** versus **Unbalanced** status depends **ONLY** on the **IMPEDANCES**, ***with respect to ground***, of these two conductors!
  - For <u>un</u>balanced interfaces, one impedance is 0 Ω or "grounded" while the other is significantly higher – generally 50 Ω or more
  - For balanced interfaces, impedances are "nominally" **EQUAL**
  - Since driver, line, and receiver are connected in parallel, each must have equal impedances to ground – it's a sub-system!

UNBALANCED vs BALANCED

Unbalanced

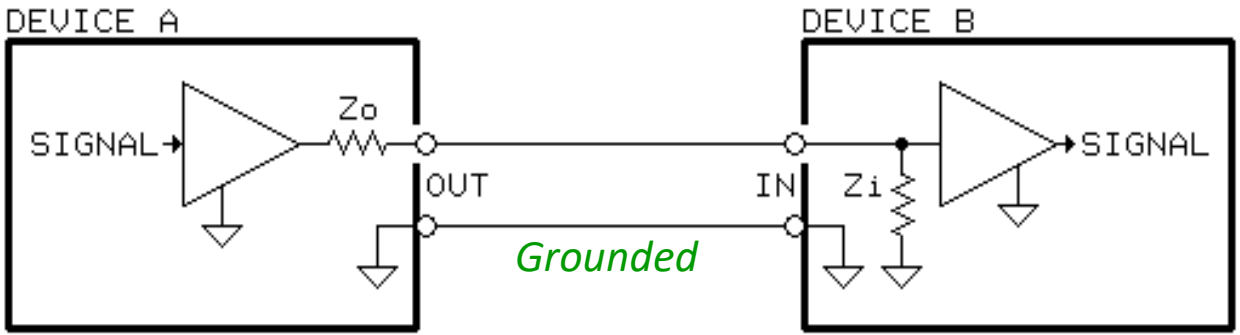

Balanced

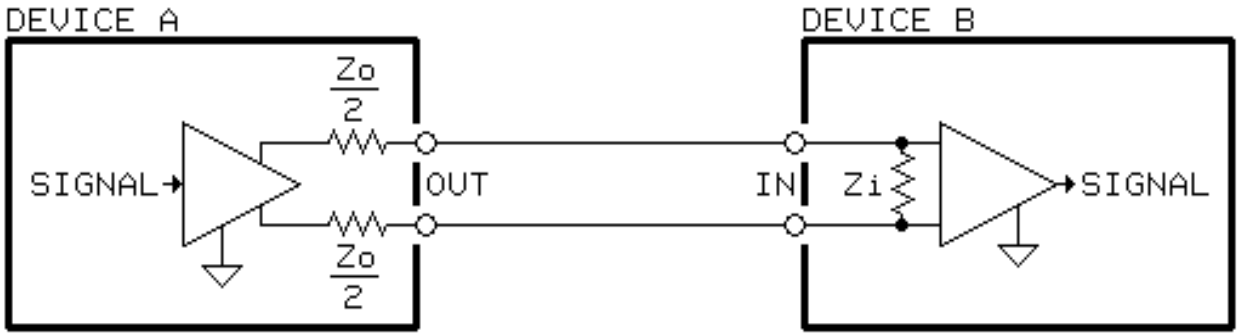

UNBALANCED INTERFACES

- **INHERENTLY SUSCEPTIBLE** to noise coupling!
- It's ironic that they still dominate consumer audio after nearly 100 years, while the dynamic range of readily-available program material has steadily increased – the era of AM radio and scratchy 78 RPM records is long gone!

COMMON-IMPEDANCE COUPLING

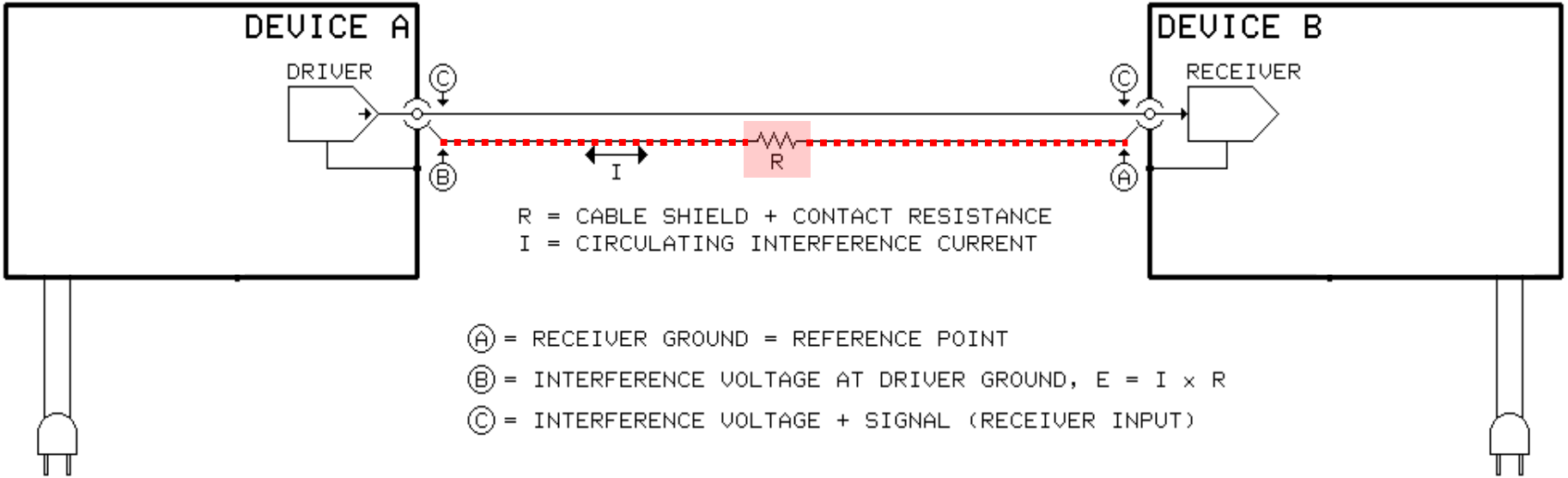

Two currents, power-line leakage and signal, flow in the same impedance "R," which allows them to couple!

LEAKAGE CURRENT IN “INVISIBLE” GROUND LOOP

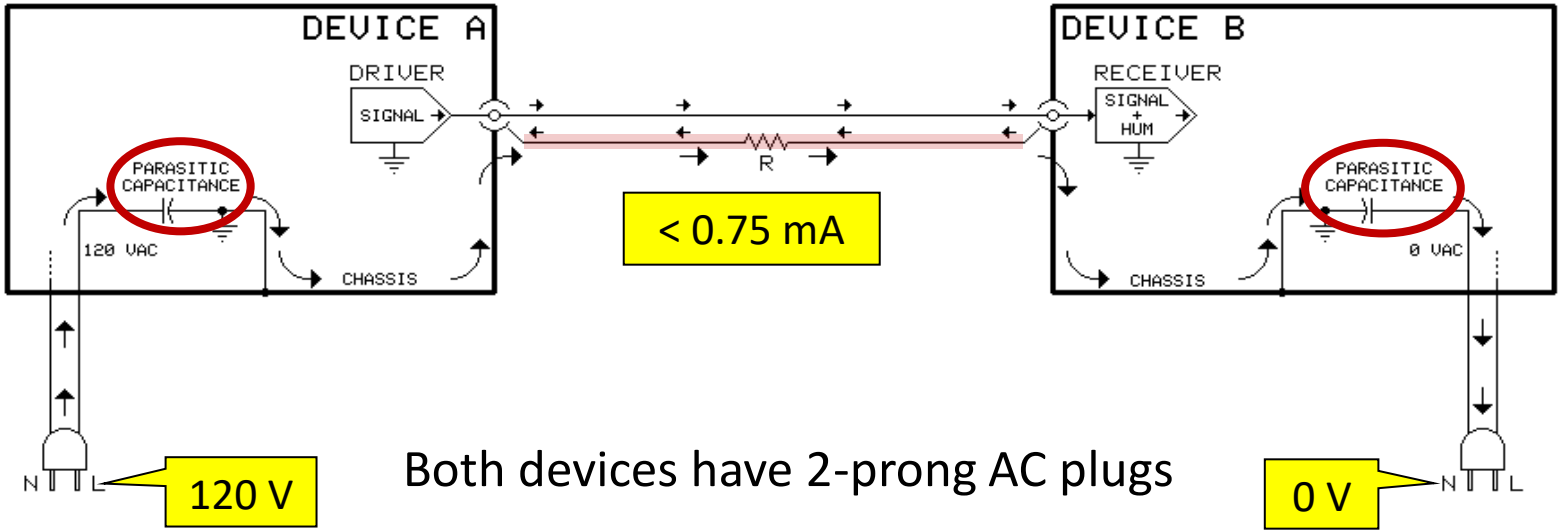

Both devices have 2-prong AC plugs

EXAMPLE OF CABLE NOISE DUE TO LEAKAGE CURRENT

- A 25-foot audio cable (foil shield, #26 AWG drain wire) is found to have an end-to-end shield resistance of 1.0 Ω
- Measured leakage current between the ungrounded devices is 316 µA (well under the UL limit of 750 µA)
- From Ohm's law, noise voltage E = I x R = 316 µA x 1 Ω = 316 µV
- Consumer signal reference level = −10 dBV = 316 mV
- Therefore, SNR (signal to noise ratio) = 20 x log (316 mV⁄316 µV) = **60 dB**
  - **20 dB worse than a CD player!** (15 dB "headroom" assumed)
- The same length of **Belden #8241F** cable, with its shield resistance of only 0.065 Ω, increases SNR to 84 dB, an **improvement of 24 dB!**

THE BALANCED INTERFACE

- Inherently immune to noise coupling – that's why it's "professional"
- Telephone companies popularized it in 1890s and still use it today
- **Its true nature has been WIDELY MISUNDERSTOOD for decades!**

"Each conductor is always equal in voltage but opposite in polarity to the other. The circuit that receives this signal in the mixer is called a differential amplifier and this opposing polarity of the conductors is essential for its operation."

This **WRONG** explanation from the internet, like many others in print, **doesn't even mention THE single defining property of a balanced interface!**

I presented my paper "Balanced Lines in Audio – Fact, Fiction, and Transformers" 25 years ago, hoping to debunk this myth, whose consequences have tarnished the reputation of balanced interfaces in general!

IT'S ALL ABOUT IMPEDANCES! AND ONLY IMPEDANCES!

"A balanced circuit is a two-conductor circuit in which both conductors and all circuits connected to them have the **same impedance** **with respect to ground** and to all other conductors. The purpose of balancing is to make the noise pickup equal in both conductors, in which case it will be a common-mode signal which can be made to cancel out in the load."

Henry W. Ott, Distinguished Member of the Technical Staff, AT&T Bell Labs

"Only the common-mode **impedance balance** of the driver, line, and receiver play a role in noise or interference rejection. This noise or interference rejection property is **independent** of the presence of a desired differential signal. Therefore, it can make no difference whether the desired signal exists entirely on one line, as a greater voltage on one line than the other, or as equal voltages on both of them. **Symmetry** of the desired signal has advantages, but they concern headroom and crosstalk, <u>not</u> noise or interference rejection."

IEC Standard 60268-3 (2000)

BASIC BALANCED INTERFACE

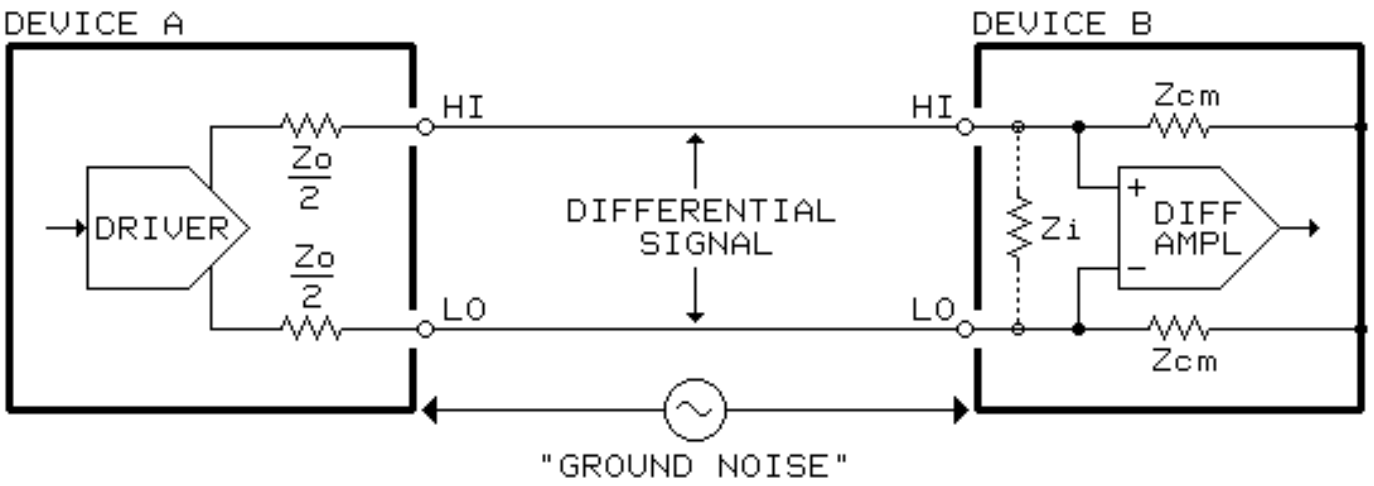

Audio signal between HI and LO is “differential-mode” or **DM**
Noise appears on both HI and LO at receiver as **“common-mode”** or **CM**

COMMON-MODE REJECTION RATIO or CMRR

- **Ideal** receiver would respond only to **DM** and not respond at all to **CM**
- **Real** receivers, whether using amplifiers (“active”) or a transformer, will have some small response to **CM** (i.e., limited rejection)
- **Common Mode Rejection Ratio**, or **CMRR** is the ratio of **DM** (signal) gain to **CM** (noise) gain, most commonly expressed in **dB**
  - Is a **ratio** **not** a signal **level** – and **not** expressed as dBu, dBV, or dBm
  - Is a **positive** number for any useful receiver
  - A larger number means better noise rejection

BALANCED INTERFACE = WHEATSTONE BRIDGE

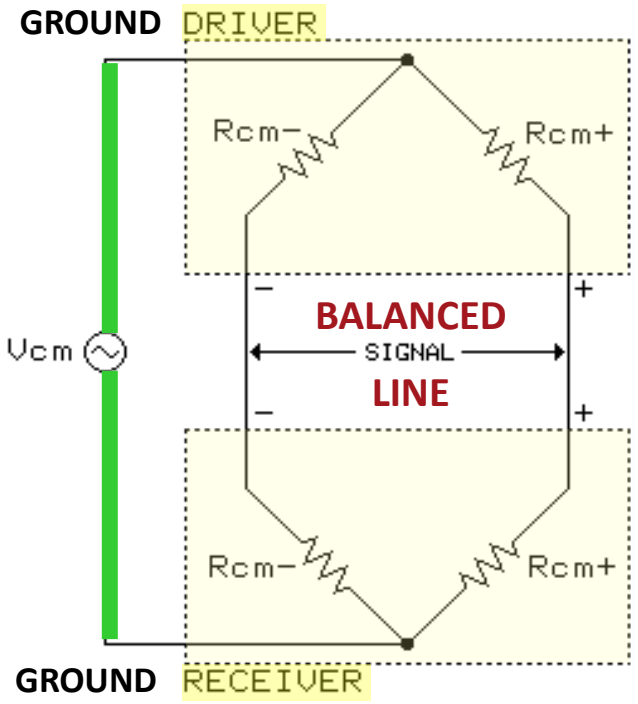

- Driver/receiver CM impedances form bridge
- Unless precisely "balanced," the bridge **converts** V_{cm} to signal, reducing rejection
- "Balance" requires precision ratio matching of the + and – "arms" of the bridge
  - Variations have ***worst*** effect when all four impedances are equal and ***least*** effect when upper and lower pairs are widely different
  - If lower pair (receiver CM input) impedances are made extremely high, good balance (high CMRR) is maintained even with wide variations in upper pair (driver output) impedances

“REAL” vs “MARKETING” CMRR SPECS

- In **real-world** equipment, driver output impedances are determined by typical ±5% tolerance resistors and ±20% tolerance (or worse) capacitors
  - Typical output impedance **imbalances** are about **±10 Ω (at 60 Hz)**
- In **real-world** “electronically-balanced” line receivers, CM input impedances typically range from 10 kΩ to 50 kΩ
  - This makes their **real-world** noise rejection (CMRR) *exquisitely* sensitive to driver output imbalance
  - CMRR of the popular SSM-2141 balanced input IC drops by **25 dB**, from 90 dB to 65 dB) with only a **1 Ω** imbalance at the driver output
- **Actual CMRR then becomes unpredictable in the assembled system, although the receiving equipment input has a high advertised CMRR!**

NEW TEST TO “MAKE IT REAL”

- **A CMRR (noise rejection) test that uses a shorted input or a laboratory trimmed source produces data that’s meaningless in the real world!**
- Traditional CMRR tests completely ignored effects of “real” signal sources
  - In 1999, the IEC recognized that results of their test didn’t reflect real-world experience and asked for comments
  - I proposed the new test, which was adopted and published August 2000 in *IEC Standard 60268-3, Sound System Equipment - Part 3: Amplifiers*
  - Audio Precision, much to their credit, has also incorporated the new IEC test in several audio analyzers

TESTS FOR CMRR – OLD vs NEW

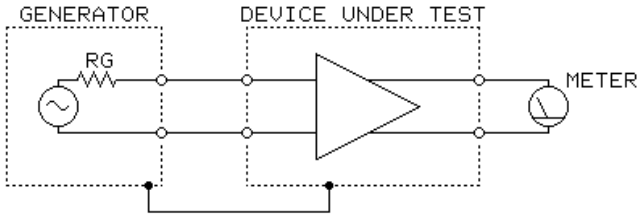

IEC Normal-Mode Test

Establishes 0 dB reference

Old – Tweaked 'til Perfect

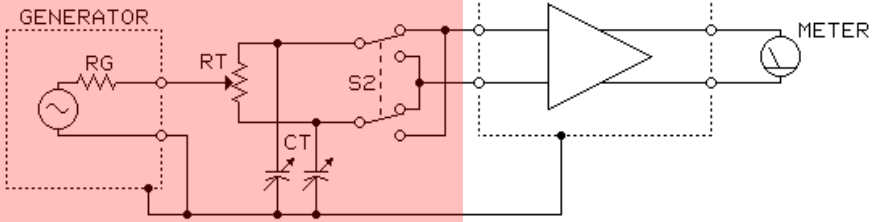

IEC Common-Mode Test 1988 Ed 2

RT and CT are trimmed for same reading as S2 is toggled. This "perfect" reading is used to calculate CMRR.

New – Imbalanced ±10 Ω

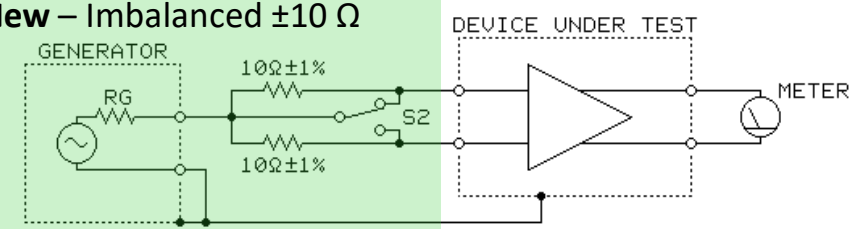

IEC Common-Mode Test 2000 Ed 3

S2 is toggled and highest reading noted. This reading is used to calculate CMRR.

THE “PIN 1 PROBLEM” – IT’S DESIGNED-IN

- Common-impedance coupling that occurs inside equipment, turning its shield connections into very-low-impedance signal inputs!
- Dubbed the “pin 1 problem” (XLR pin 1 = shield) by the late Neil Muncy in his 1994 AES paper
- This defect has been inadvertently designed into an alarming number of products … and, sadly, it continues
- **It allows shield current (ground-loop current) to flow in wires or PCB traces shared by internal amplifier circuitry**
- **This problem can exist at I/O ports, whether analog or digital, in ANY piece of equipment**

CAUTION, “PIN 1 PROBLEM” INSIDE!

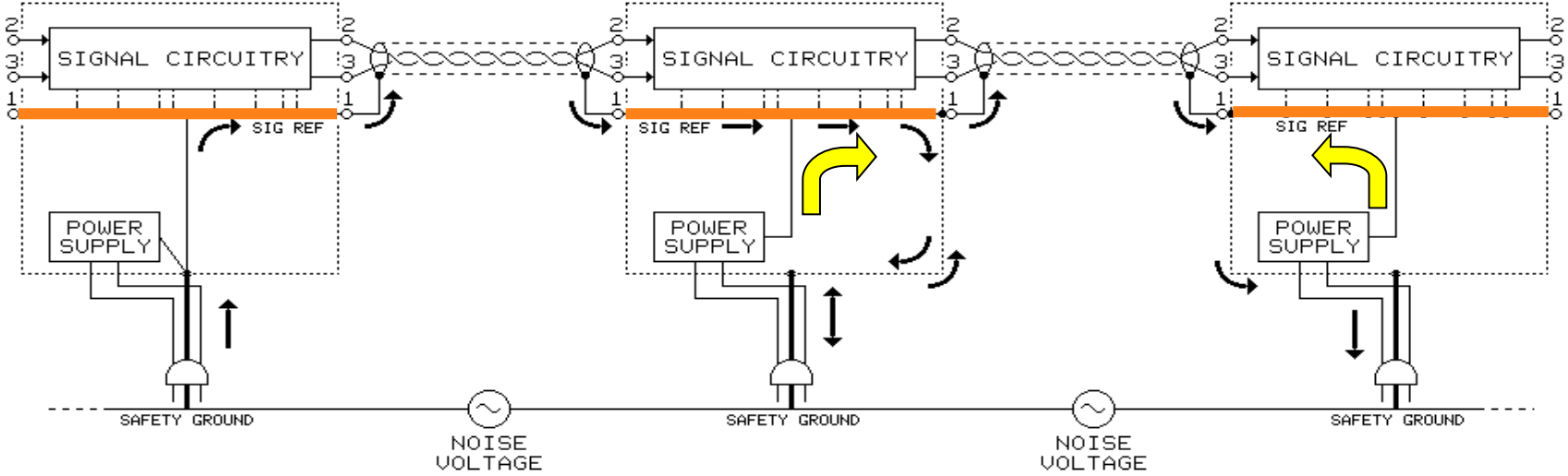

Shield current flows in equipment’s internal signal reference “ground”

Power-supply leakage current flows in signal reference ground in two of the boxes. This design flaw results in so-called **“sensitive”** or “**power-line prima-donna**” equipment.

GOOD DESIGNS AVOID "PIN 1 PROBLEM"

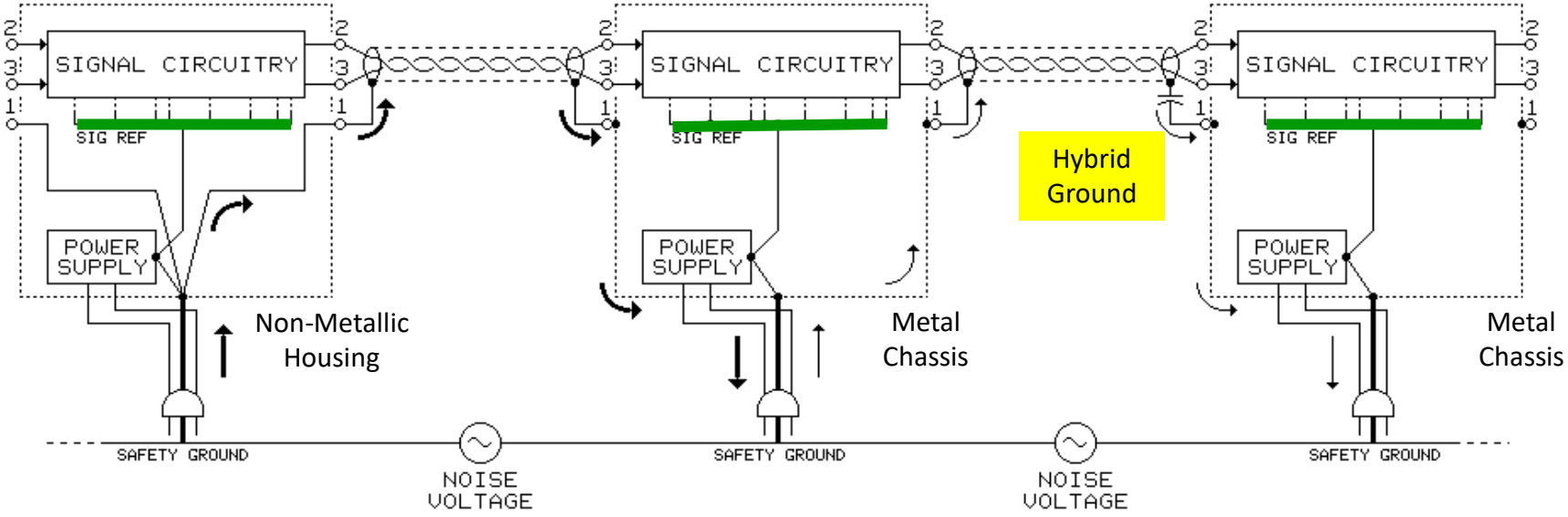

Shield currents must flow back to safety ground – giving them their own separate path completely avoids the problem!

UNBALANCED TO BALANCED TRANSITIONS

- Also called “Consumer to Pro” conversion
- Signal reference levels are different
  - Consumer ref = −7.8 dBu = −10 dBV = 0.316 V rms
  - Professional ref = +4 dBu = +1.8 dBV = 1.228 V rms
  - Requires voltage gain of about 4 X, or 12 dB
    - 0 dBu = 0.775 V rms
    - 0 dBV = 1.000 V rms
    - **0 dBV = +2.2 dBu**
- **Why not use a 1:4 step-up transformer do I hear you ask?**

USE A SIMPLE "TRANSITION CABLE" INSTEAD

- Mode transition and noise rejection are the issues, <u>not</u> gain
- **"Adapters" and most "adapter cables" throw away the noise reduction benefit of the balanced input**
  - An **RCA to XLR adapter** at a balanced input reduces the entire interface to a noise-prone unbalanced one!
- **A 3-conductor (shielded twisted-pair) hookup takes advantage of noise rejection available at the balanced input**
  - If the balanced input uses a quality input transformer or the InGenius® IC, noise rejection can be **80 dB** or more!
  - Even with "garden variety" balanced inputs, noise rejection will generally be about **30 dB**

2 CONDUCTORS ... OR 3?

Unbalanced cable + **ADAPTER** = **0 dB** rejection

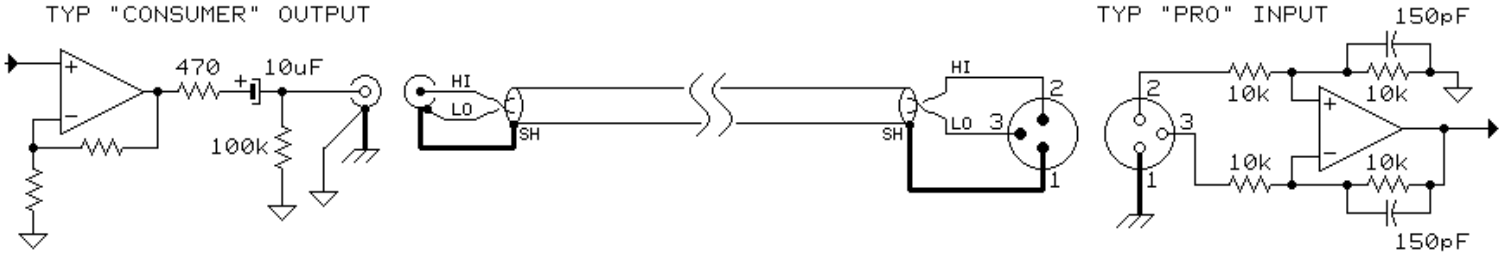

Balanced (STP) cable = typically **≥ 30 dB** rejection

BALANCED TO UNBALANCED TRANSITIONS

- Also called “Pro to Consumer” or “+4 to −10” converter
- **Signal level difference <u>is</u> a legitimate concern**
  - Consumer inputs are easily over-driven by pro levels, requires 12 dB loss
  - If pro output level is reduced, metering and S/N are degraded
  - Resistor “pad” can be used but provides no isolation
- **Design variations among balanced output stages makes it risky business!**
  - Some misbehave or are damaged if either output line is grounded
  - But some must have one line grounded, but where?
    - Grounding at driver reduces the entire interface to unbalanced
    - Grounding at receiver, enabling noise rejection, may cause high-frequency instability in some “servo-balanced” outputs

BALANCED OUTPUT TYPES

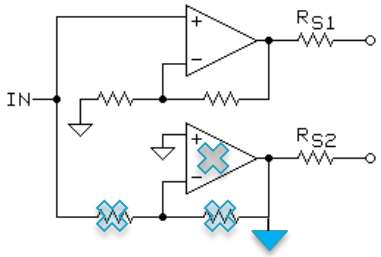

GROUND-REF SYMMETRICAL

One Output **Can't** Be Grounded!

GROUND-REF HI ONLY

Low Output **May** Be Grounded!

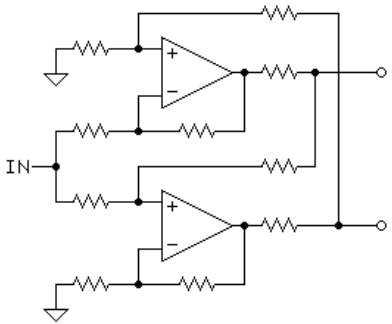

ACTIVE FLOATING DIFF

One Output **Should** Be Grounded

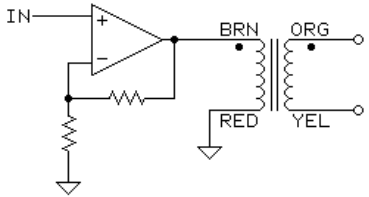

TRANSFORMER FLOATING DIFF

One Output **Must** Be Grounded!

BLAS-6

OUTPUT STAGES EQUIVALENT CIRCUITS

Ground-Ref
Symmetrical

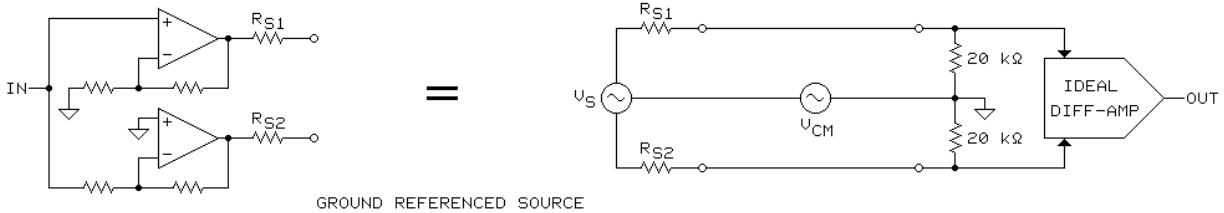

Active
Floating Diff

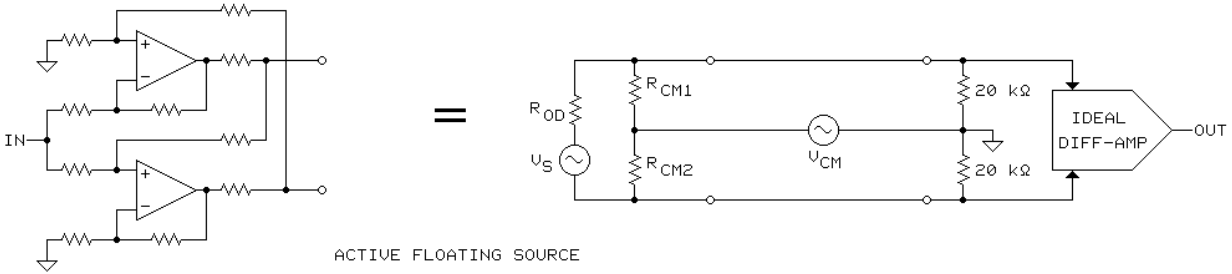

Transformer
Floating Diff

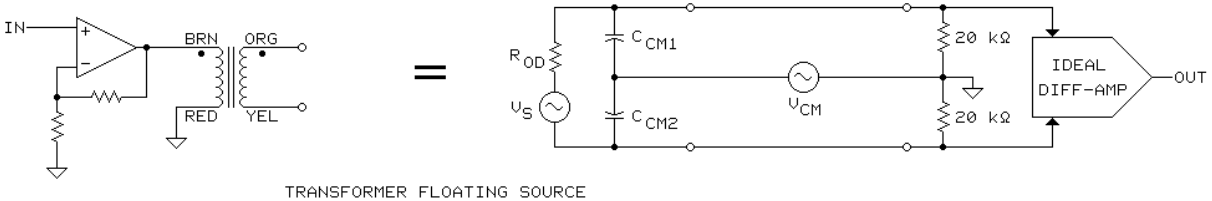

BLAS-6

THE MANUFACTURER PROBABLY WON’T TELL YOU

Experimenting can be both frustrating and dangerous to equipment!

SPECIFICATIONS

Measurement Conditions

1. 0 dBu = 0.775 V rms.
2. 0 dBm ≡ 1 mWatt =0.775 V rms across 600 ohm load.
3. Measurements are referred to a 1 kHz, 0 dBu sinewave input signal unless noted.
4. Measurement bandwidth is restricted to 30 kHz unless noted.
5. No personality modules installed, enhancement disengaged.
6. No isolation transformers installed.

Number of Channels:
Two independent channels (common power supply)

Input Topology:
Electronically-balanced via "Superbal" differential input amplifier topology

Input Impedance:
30 k ohms balanced
15 k ohms unbalanced

Nominal Input Level:
0 dBu

Output Topology:
Electronically-balanced via modified cross-coupled differential amplifier topology

Nominal Output Power (Ref. 1 kHz):
0 dBm, ±0.5 dBm (+1 dBu, ±0.5 dB with 15 k load)

Maximum Output Power:
+20 dBm

Output Source Impedance:
75 ohms

Minimum Load Impedance:
600 ohms

Frequency Response:
20 Hz 20 kHz, ±1 dB (Ref. 1 kHz, 0 dBm output power, 500 kHz measurement bandwidth)

(Total Harmonic Distortion + Noise):
< 0.1%, 20 Hz 20 kHz (0 dBm output power)

Output Noise Power:
< -80 dBm A-weighted (77.5 μV rms across 600 ohm load)

THE ONLY METHOD THAT ALWAYS WORKS

- Transformer isolation works with **any** output type
- 4:1 ratio transformer reduces signal 12 dB
- Superior noise rejection

Jensen Transformers

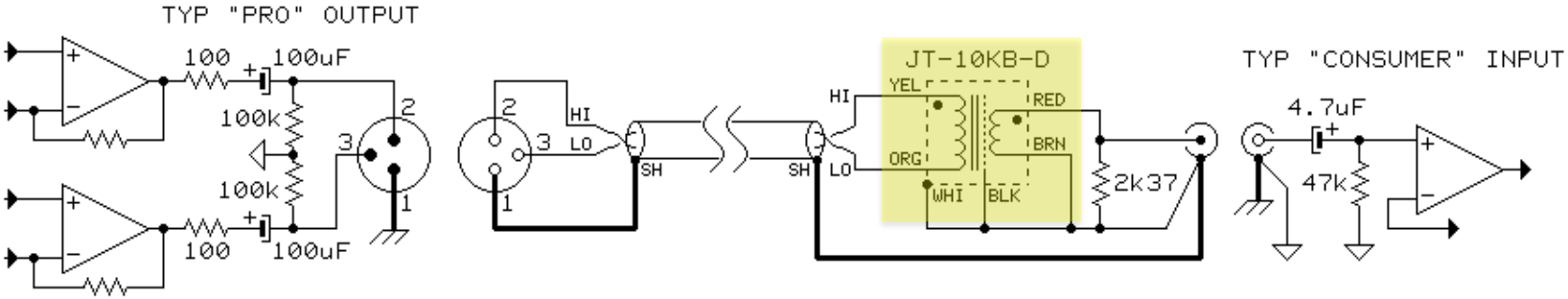

ANALOG SIGNAL INTERFACES AND STANDARDS

- The Audio Engineering Society has a number of standards committees that work to make the results of assembling even the most complex audio systems predictable.
- Some manufacturers are ignorant of existing standards and do things their own way, often making their equipment incompatible with other gear. System performance may be unacceptable or simply not work at all!
- Critical specifications and/or test conditions are sometimes conspicuously absent from specifications and user manuals
- Installers and users of equipment sometimes find that system performance is poor for no obvious reason. For example, an unbalanced input might have an input impedance of 2 kΩ instead of meeting the accepted IEC standard of 22 kΩ minimum. Low end frequency response would likely suffer.

Thanks for Your Attention!

Questions?

Engineer_bill@verizon.net