History of Disk Recording*

JOHN G. FRAYNE

Pasadena, CA 91105, USA

The real credit for the first successful mechanical recording of the human voice is usually given to Thomas A. Edison. In 1877 he developed the prototype of the phonograph by attaching a stylus to a vibrating diaphragm which made a tracing on tinfoil wrapped around a cylindrical drum. In his U.S. patent 200,251, filed on 1877 December 24, and granted as titled on 1878 February 19, he only claimed "an improvement in phonograph or speaking machines." In 1887 Emile Berliner invented the disk record employing the lateral cut, as opposed to Edison's vertical-cut records. He also invented the method of mass production of records from metal stampers. In 1900 he registered the trademark "His Master's Voice." In 1912 Edison began employing the flat Berliner disk with a standard speed of approximately 78 r/min.

There were no noticeable advances in the recording art for the remainder of the decade. The arrival of radio broadcasting in 1921–1922 began to affect the sale of records, and the recording companies began looking around for some salvation.

In the early 1920s Bell Telephone Laboratories began work on two rival methods of sound recording with the ultimate objective of adding sound to the silent movies. One team, headed by Maxfield and Harrison, was assigned the electrical recording and reproduction of disk records. The other, under E. C. Wente, took on the development of film for the same medium. By 1924 December, a demonstration of the new disk recording system was made for the Victor Talking Machine Company. This was followed by Victor and Columbia obtaining recording licenses from Bell Telephone Laboratories in early 1925. Victor called the new process "Orthophonic," which could be played on the old acoustic-type or the new electrical reproducers.

The results of the research by Maxfield and Harrison are described in the 1926 July, issue of the *Bell System Technical Journal* [1]. By this time, the theory of electric filter circuits had been fully explored by Zoble [2] and others at Bell Telephone Laboratories, and as early as 1917, Wente [3] had used the equivalent electric circuit to aid in the design of the condenser microphone. The frequency characteristic is shown in Fig. 1. The mechanical schematic and the equivalent electric circuits are shown, respectively, in Figs. 2 and 3. The equivalent electric circuit of the

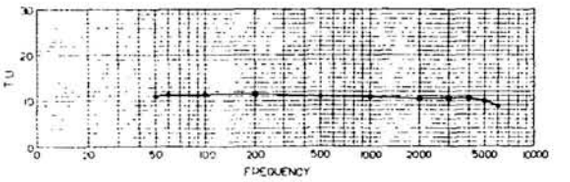

Fig. 1. Calibration of the condenser microphone and associated amplifiers. This curve shows merely the relative frequency sensitiveness of the system, the zero line having been chosen arbitrarily. (After Maxfield and Harrison [1].)

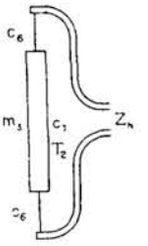

Fig. 2. Mechanical schematic of microphone diaphragm and air chamber. (After Maxfield and Harrison [1].)

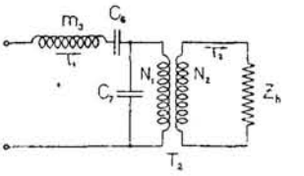

Fig. 3. Electrical equivalent of mechanical system of Fig. 2. (After Maxfield and Harrison [1].)

* Presented at the 2nd AES International Conference, Anaheim, California, 1984 May 11–14; manuscript received 1984 July 30.

new electromagnetic rubber-line recorder is given in Fig. 4. The instrument is essentially a three-section mechanical filter with which the recording stylus and its holder constitute the series mass in the second section. Since a filter of this type appears at its input end as a pure resistance within the transmission band, the velocity of the series mass is proportional to the driving force. In practice it is not feasible to have constant velocity over the entire frequency range. Since the amplitude of the lateral cut varies inversely with frequency, leading to abnormally wide grooves at the lower end of the spectrum, equalization is introduced at the low end to provide an essentially constant amplitude recording. Fig. 5 shows an early electric recorder, using a continuous rubber-line filter, which provides an essentially pure resistance at the input end. Fig. 6 illustrates the mechanical filter of the recorder, while Fig. 7 shows the response for various constants of the system.

The next step was the development of a matching mechanical reproducer. A diagrammatic sketch is shown in Fig. 8, and the equivalent electric circuit is given in Fig. 9.

The success of the new recorder encouraged the Western Electric Company, which had taken over the commercial exploitation, to adapt it for talking motion pictures, with sound being reproduced by a synchronous disk reproducing system. Certain basic changes were made for this system. A rotation speed of 33⅓ r/min was adopted in place of the old 78 r/min. A 16-in (405-mm) diameter disk was employed, and the film speed was increased from 16 to 24 frames per second. The first 33⅓-r/min disk recording machine was developed by Western Electric Company. A mechanical filter was employed to filter out irregularities in the motion of the mechanical drive system. Fig. 10 shows the Universal Base theater reproducer, with the disk turntable mounted on the rear of the projector. A steel needle was used in reproduction, the recording being done from the inside out. This improved the sound quality of the inner grooves since a new needle would give better reproduction of the shorter wavelengths at the slower groove velocities. This system was first used commercially in the production of the feature "Don Juan" in 1926. Only the music score was recorded. In 1927 "The Jazz Singer" was produced, also by Warner Bros., using the trade name Vitaphone. The parallel introduction of a film sound track by ERPI in 1928–1929 led to the abandonment of the synchronized disk system circa 1932.

The next historic step in recording development was made by Bell Telephone Laboratories in the early 1930s. A completely new system was perfected incorporating the following [4].

1) A vertical-cut recorder using electrical feedback was to eliminate mechanical resonance. A schematic representation of the recorder is shown in Fig. 11. Fig 12 shows a flat response up to 12 kHz, the mechanical resonance having been eliminated

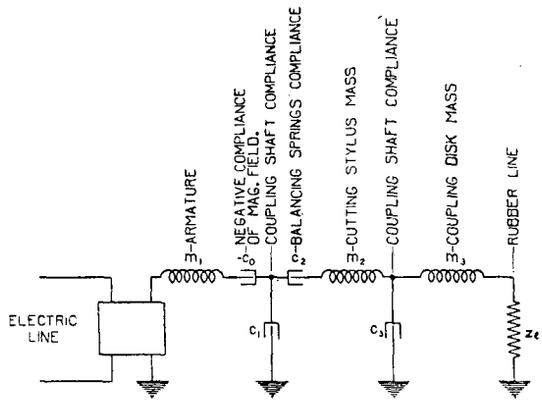

Fig. 4. Equivalent electric circuit of the electromagnetic recorder. (After Maxfield and Harrison [1].)

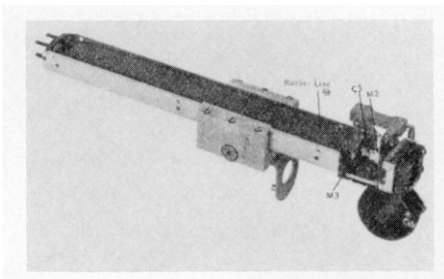

Fig. 5. Inverted view of the electromagnetic recorder, complete except for cover over rubber line. (After Maxfield and Harrison [1].)

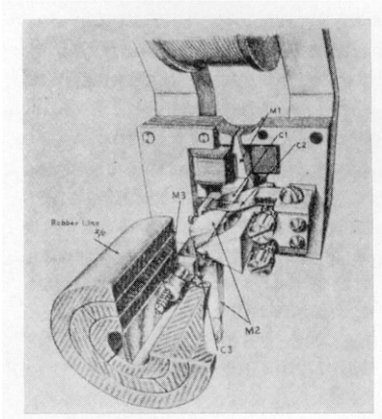

Fig. 6. Detailed drawing of the mechanical filter of an electromagnetic recorder. (After Maxfield and Harrison [1].)

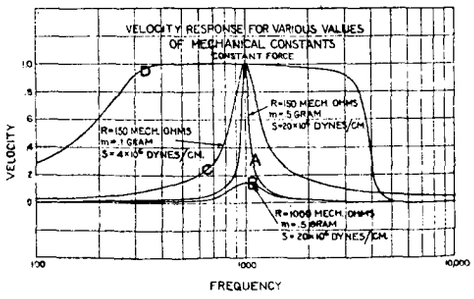

Fig. 7. Velocity response for various values of mechanical constants. (After Maxfield and Harrison [1].)

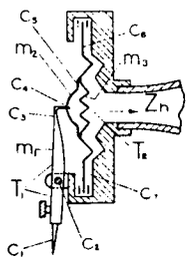

Fig. 8. Diagrammatic sketch of the mechanical system of the Orthophonic phonograph. (After Maxfield and Harrison [1].)

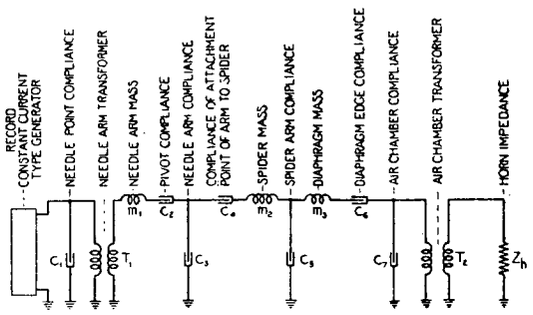

Fig. 9. Electrical equivalent of system of Fig. 8. (After Maxfield and Harrison [1].)

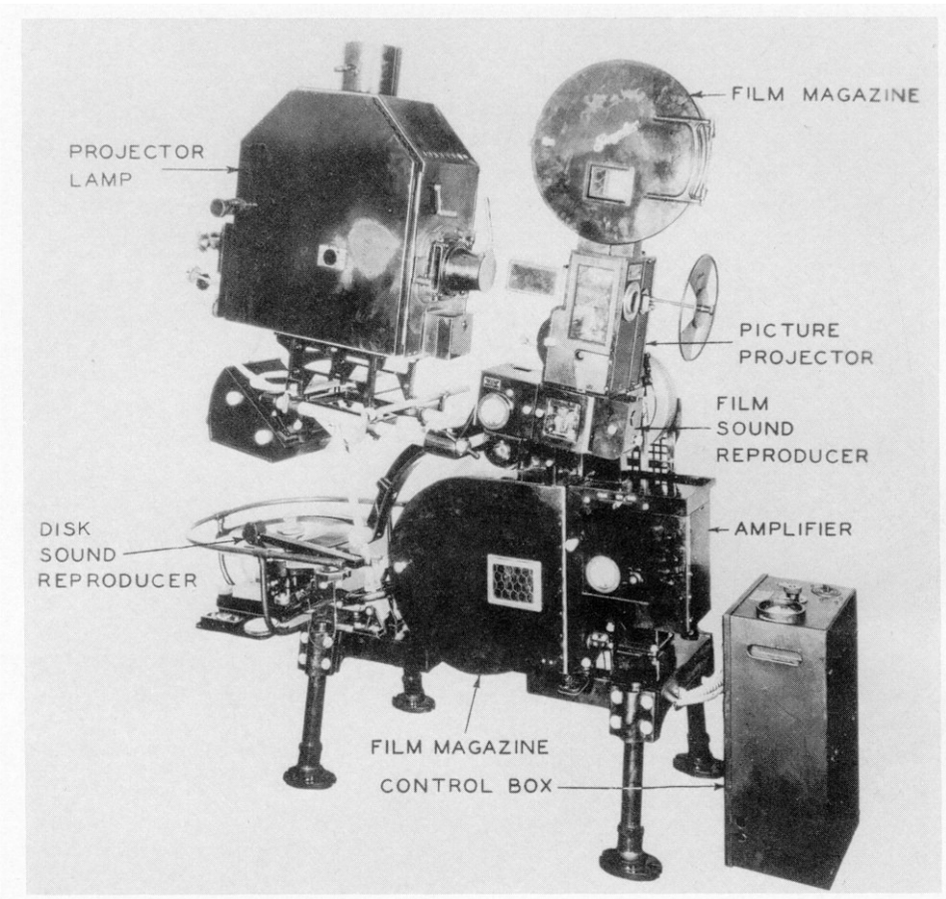

Fig. 10. Western Electric theater reproducing equipment incorporating the so-called "Universal Base," which carried apparatus for reproducing both disk and sound on film.

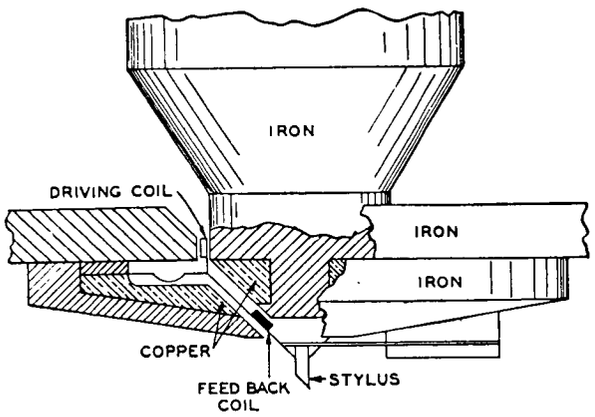

Fig. 11. Cross-sectional view of feedback vertical recorder. (After Frayne and Wolfe [5].)

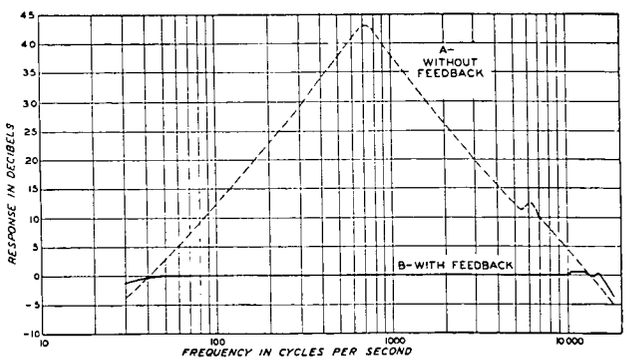

Fig. 12. Frequency response of vertical recorder with and without feedback. (After Frayne and Wolfe [5].)

entirely.

2) Flowed hot wax disks were used in place of the large wax plates.

3) Gold sputtering of the recorded wax was used in the plating process.

(4) Pre- and postequalization were used to increase the signal-to-noise ratio.

(5) Acetate pressings replaced the old shellac disks.

The recording and reproducing characteristics are shown in Fig. 13. The large amount of preequalization and subsequent postequalization in the upper frequency range contributed to the high signal-to-noise ratio of these records. Subsequently an industrywide search for standard recording and reproducing characteristics resulted in the reproducing curve of Fig. 14.

The system was introduced on an experimental basis in Hollywood, notably at Columbia Studios, where the original recording of *One Night of Love* with Grace Moore won the Academy Award for best sound. This caused a flurry of interest in other studios, and the Hollywood ERPI disk processing lab was flooded with work. Dick Fullerton was put in charge of this operation. Later he became chief engineer of the World Broadcasting Company, which produced vertical-cut transcriptions until the advent of magnetic tape.

Despite the high quality of the Bell Telephone Laboratories vertical-cut system, the older lateral-cut records continued to be widely used. A paper by Pierce and Hunt, in the journal of the Society of Motion Picture Engineers [7], appeared to give an unfavorable comparison when the vertical cut was compared to the lateral technique. Fig. 15 shows the distortion introduced by the circular stylus tip as it passes over a cosine curve recorded in the pressing. This defect could be overcome by rerecording the distorted curve with reverse polarity with the same circular stylus tip. Fig. 16 shows curves of distortion versus frequency for various recording conditions, which appear to favor the lateral-cut approach. The introduction of magnetic tape recording following World War II effectively ended the use of the electrical transcription for broadcast.

Two historical developments took place in the late 1940s. In 1948 CBS introduced, with much fanfare, their long-playing records with a capacity of around 250 grooves per inch and a playing time of 20 to 25 min. The radius of curvature of the pickup was on the order of 0.001 in (0.025 mm).

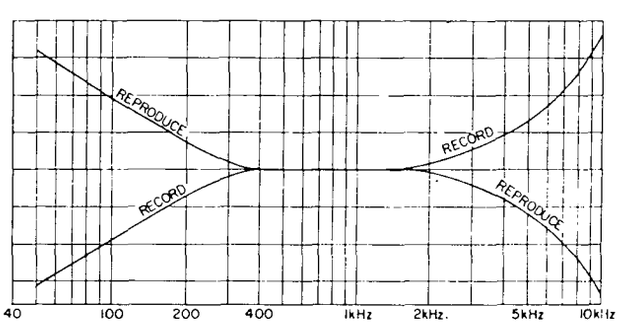

Fig. 13. Recording and reproducing characteristics for vertical records. This is the standard characteristic used in 1953, when such records were still in use. Each major vertical division is 5 dB. (After Tremaine, Audio Cyclopedia [6].)

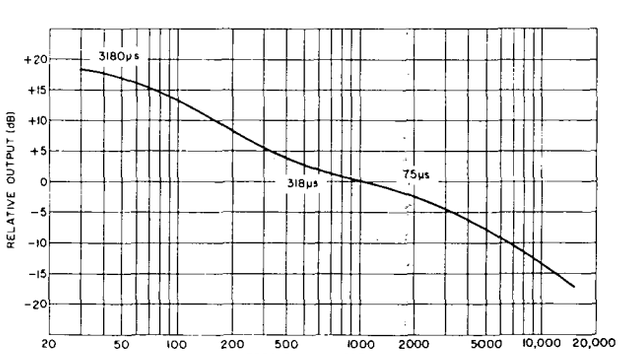

Fig. 14. NAB (RIAA) standard reproducing characteristic. (After Tremaine, Audio Cyclopedia [6].)

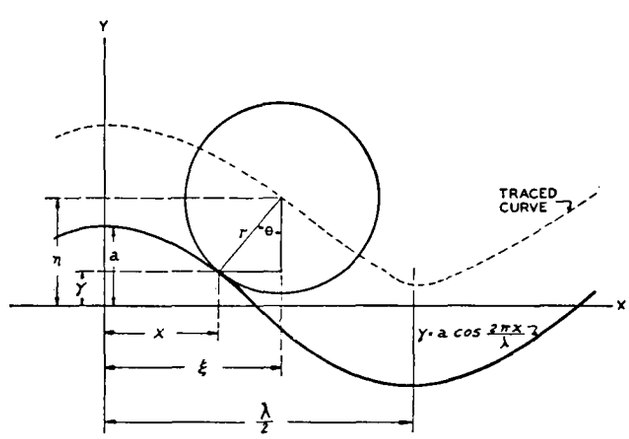

Fig. 15. Recorded curve and curve traced in reproduction. (After Pierce and Hunt [7].)

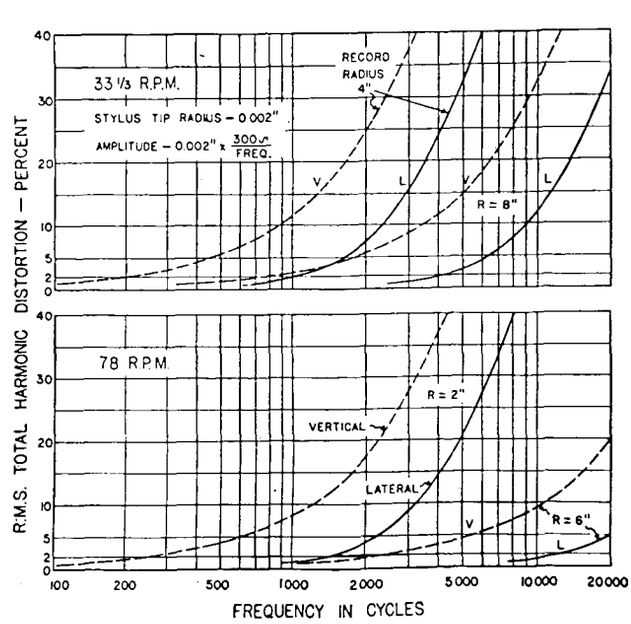

Fig. 16. Curves of distortion versus frequency for various recording conditions. (After Pierce and Hunt [7].)

About one year later RCA announced their 45-r/min system. This utilized the microgroove technique but had a much shorter playing time of around 5 min. It employed a large center hole of approximately 1.5 in (38 mm), which ensured a more accurate centering of the record on the turntable with resulting improved quality of reproduction. This was a well-designed system, but the short playing time gradually reduced its appeal to the general public. The CBS system continued to be the standard method of recording until the introduction of stereo records in the late 1950s.

The final phase of this presentation will deal with the development of the stereo disk system. In the early 1930s Bell Telephone Laboratories [8] were experimenting with what was known at the time as acoustic perspective sound reproduction. They found that a three-channel system of recording and reproduction gave satisfactory spatial and depth reproduction of the original orchestral music. They found that a two-channel system gave somewhat inferior results. Later they developed a three-channel film recording and reproducing system which was demonstrated in 1939. The term "stereophonic" had been adopted by this time. It is not generally recognized that considerable research was carried on in the 1930s on a method of stereophonic disk recording in which two channels were recorded in a single groove. For example, in 1933 Blumlein of EMI was granted the British patent 394,325 on a two-channel stereo system. He called attention to an orthogonal 45–45 system as an alternative to a vertical–lateral system. At Bell Telephone Laboratories Keller made stereo records as early as 1936, and was granted U.S. patent 2,114,471m, which also discloses a 45–45 alternative to the vertical–lateral system. There was no followup by the Westrex Corporation to the earlier Bell Telephone Laboratories until circa 1957, when rumors of stereo disk developments in Britain and Germany forced Westrex into a crash program to develop a stereo disk system that could give the same quality of sound in each channel. A preliminary sketch for the design of a stereo disk recorder illustrated the difficulties involved in a vertical–lateral combination. Because of this problem and the desire to obtain comparable quality in both channels, the orthogonal 45–45 system evolved [9]. A patent search revealed both Blumlein and Keller patents covering this system. A simplified schematic of the stereo recorder is given in Fig. 17. Fig. 18 shows a cross section of 45–45 grooves for limiting conditions. The feedback circuits were applied for each drive assembly, thus giving the same resonance-free response as in the earlier vertical recorder.

This has been a brief review of the disk recording history over a span of 107 years. It again illustrates how a simple idea by a single individual becomes transformed over the years by others utilizing new techniques and new materials into a medium of almost perfect reproduction of the human voice and a wide miscellany of musical instruments and sound-producing devices. We can only wonder what the twenty-first century has in store for us.

REFERENCES

[1] J. P. Maxfield and H. C. Harrison, "Methods of High Quality and Reproducing of Music and Speech, Based on Telephone Research," *Bell Sys. Tech. J.*, vol. 5, p. 493 (1926 July).

[2] O. J. Zoble, "Theory and Design of Uniform and Composite Electric Wave Filters," *Bell Sys. Tech. J.* (1923 Jan.).

[3] E. C. Wente, "Electrostatic Transmitter," *Phys. Rev.*, vol. 19 (1922).

[4] L. Vieth and C. F. Wiebusch, "Recent Development in Hill and Dale Recorders," *J. SMPE* (1938 Jan.).

[5] J. G. Frayne and H. Wolfe, *Sound Recording* (John Wiley and Sons, New York, 1949).

[6] H. M. Tremaine, *Audio Cyclopedia* (Howard Sams and Co. Inc., Indianapolis, 1969).

[7] J. A. Pierce and F. V. Hunt, "Distortion of Sound Reproduction from Phonograph Records," *J. SMPE*, vol. 31, p. 157 (1938 Aug.).

[8] H. Fletcher, "The Stereophonic Sound-Film System," *J. SMPE*, vol. 37, p. 331 (1941 Oct.).

[9] C. C. Davis and J. G. Frayne, "The Westrex Stereodisk System," *Proc. IRE*, vol. 46 (1958 Oct.).

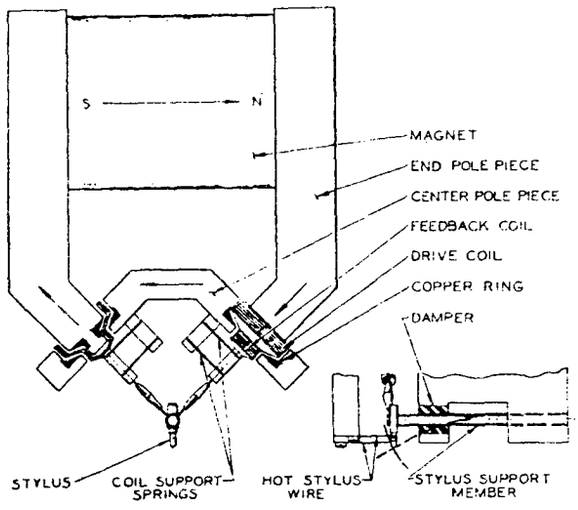

Fig. 17. Simplified illustration of mechanical construction of stereo recorder. (After Davis and Frayne [9].)

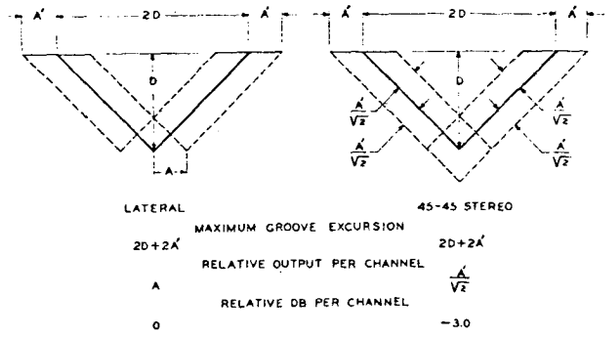

Fig. 18. Comparison of 45–45 with standard long-playing lateral groove. (After Davis and Frayne [9].)

THE AUTHOR

John G. Frayne was born in Ireland in 1894. He attended Trinity College in Dublin and emigrated to the United States during World War I, becoming involved in air-to-ground "wireless telephony" development for the US Signal Corps, often flying "Jennies" in the course of his work. He then worked for the development and research department of AT&T (prior to the existence of Bell Labs.) He was involved with the development of the first transcontinental telephone circuit employing vacuum tube repeaters. After returning to college, he received his Ph.D. in physics from the University of Minnesota in 1922. He taught engineering mathematics at Antioch College and while on a sabbatical to California Institute of Technology in 1926 he again became associated with AT&T on development of optical sound recording for motion pictures. After a long and fruitful career with Electrical Research Products Inc. (ERPI), a division of the Bell System, doing developmental work and solving problems associated with optical sound recording, he retired in 1959 as head of engineering at age 65. He then became head of engineering for Consolidated Engineering in Pasadena where he worked on developing instrumentation tape recorders. From there, he began teaching physics, acoustics, and optics at California Polytechnic College until 1971. Since then he has been doing consulting work.

Dr. Frayne is an honorary life fellow of the SMPTE and has been president of that organization. He was awarded the SMPTE Progress Medal in 1946 as well as its Journal Award. He has received the Warner Gold Medal award. A fellow of the AES, he has received its Gold Medal and Emile Berliner award. His work on the film densitometer won him an award from the Academy of Motion Picture Arts and Sciences from which he also received a Commendation Award. Dr. Frayne's career was climaxed in 1984, shortly before his ninetieth birthday when he received the coveted "Oscar" from the Motion Picture Arts and Sciences Academy for the great engineering advances he brought over a long career of activity to the art of motion picture sound recording.